AiP33620
2-line Serial Interface/Common Cathode 8Seg 8Grid LED Controller/Driver with Constant Current

Product Specification

Specification Revision History:

Version	Date	Description
2020-07-A1	2020-07	New
2021-12-A2	2021-12	Modify Ordering Information
2022-04-A3	2022-04	Add SSOP20 reel packing specifications
2023-03-B1	2023-03	Update template
2024-01-B2	2024-01	Add QFN20 package form
2024-04-B3	2024-04	Modify the content
2024-09-B4	2024-09	Modify the parameter
2025-03-B5	2025-03	Modify the content
2025-07-B6	2025-07	Update application note
2026-05-B7	2026-05	Add usage instructions for some commands and recommended procedures for certain scenarios

Contents

1、General Description 4
2、Block Diagram And Pin Description 6
2.1、Block Diagram 6
2.2、Pin Configurations 6
2.3、Pin Description 7
3、Electrical Parameter 7
3.1、Absolute Maximum Ratings 7
3.2、Recommended Operating Conditions 7
3.3、Electrical Characteristics 8
3.3.1、DC Characteristics 8
3.3.2、AC Characteristics 8
4、Function Description 9
4.1、Communication Interface 9
4.1.1、Start And Stop Signs 9
4.1.2、Single Byte Communication 9
4.1.3、Multibyte Communication 9
4.2、Command System 10
4.2.1、Command Set 10
4.2.2、Constant Current Setting 10
4.2.3、Dot Matrix Setting 11
4.2.4、Display Setting 12
4.2.5、RAM Address Setting 13
4.3、RAM 13
4.4、Operation Control Flow 16
4.5、Calculation Of Output Average Current 17
5、Typical Application Circuit And Application Note 18
6、Package Information 19
6.1、SOP20 19
6.2、SSOP20 20
6.3、QFN20 (3*3) 21
7、Statements And Notes 22

i-core

7.1、The name and content of Hazardous substances or Elements in the product 22

7.2、Notes 22

i-core

1、General Description

AiP33620 is an 8×8 dots matrix LED driver chip with constant current. It can be widely used in various monochromatic LED display systems or RGB full-color LED display systems.

Each LED can control the output effective time duty cycle through 8 bit data, so as to adjust the brightness of each LED by 256 steps.

MCU interface is integrated in the chip, which can be controlled by the master IC through the two-wire serial interface similar to IIC communication protocol.

AiP33620 integrates LED blanking function, which can effectively avoid abnormal display problems such as shadowing.

AiP33620 provides more display functions and its instruction set is compatible with traditional constant voltage LED products such as AiP1628 and AiP1640, making it convenient for software engineers to quickly transplant programs and shorten the development cycle of the solution.

Features:

- Supply voltage range: 4.5V to 5.5V
- 8-channel LED dot matrix driver with common cathode
- 8-channel anode constant current drive, the maximum output current is 30mA
- Support a maximum of 8×8 matrix scanning, a total of 64 LEDs
- Instruction set is compatible with traditional constant voltage LED products, making it convenient to quickly transplant programs and shorten the development cycle of the solution
- Single point adjustment, each point supports 256 steps of brightness adjustment
- Overall adjustment, 32 steps constant current regulation of the entire dot matrix synchronization
- Two-wire serial interface
- Built-in RC oscillation
- Built-in power on reset circuit
- Built-in low voltage reset circuit
- Built-in blanking circuit
- Packaging information: SOP20/SSOP20/QFN20(3*3)

i-core

Ordering Information:

Tube packing specifications:

Part number	Packaging form	Marking code	Tube quantity	Boxed tube quantity	Boxed quantity	Notes
AiP33620SA20.TB	SOP20	AiP33620	35 PCS/tube	80 tube/box	2800 PCS/box	Dimensions of plastic enclosure: 12.8mm×7.5mm Pin spacing: 1.27mm
AiP33620VB20.TB	SSOP20	AiP33620	50 PCS/tube	200 tube/box	10000 PCS/box	Dimensions of plastic enclosure: 8.7mm×3.9mm Pin spacing: 0.635mm

Reel packing specifications:

Part number	Packaging form	Marking code	Reel quantity	Boxed reel quantity	Notes
AiP33620SA20.TR	SOP20	AiP33620	2000PCS/reel	2000PCS/box	Dimensions of plastic enclosure: 12.8mm×7.5mm Pin spacing:1.27mm
AiP33620VB20.TR	SSOP20	AiP33620	4000PCS/reel	8000PCS/box	Dimensions of plastic enclosure: 8.7mm×3.9mm Pin spacing: 0.635mm
AiP33620QA20.TR	QFN20	AiP33620	6000PCS/reel	12000PCS/box	Dimensions of plastic enclosure: 3.0mm×3.0mm Pin spacing: 0.4mm

Note: If the physical information is inconsistent with the ordering information, please refer to the actual product.

i-core

2、Block Diagram And Pin Description

2.1、Block Diagram

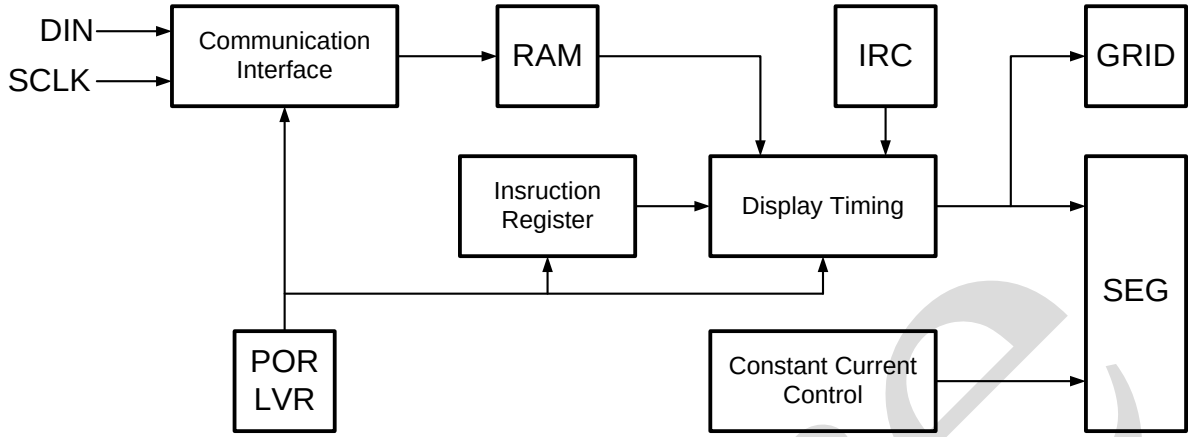

2.2、Pin Configurations

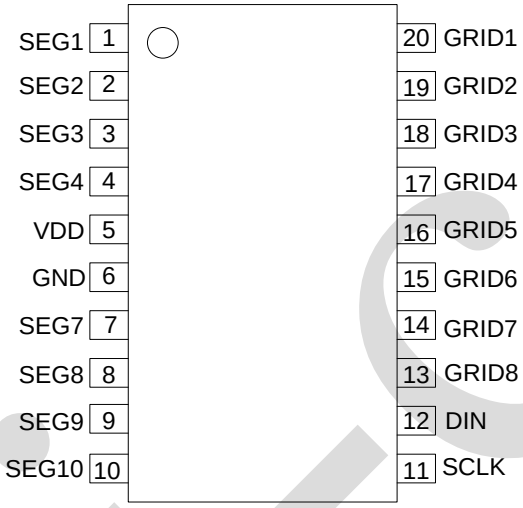

SOP20/SSOP20

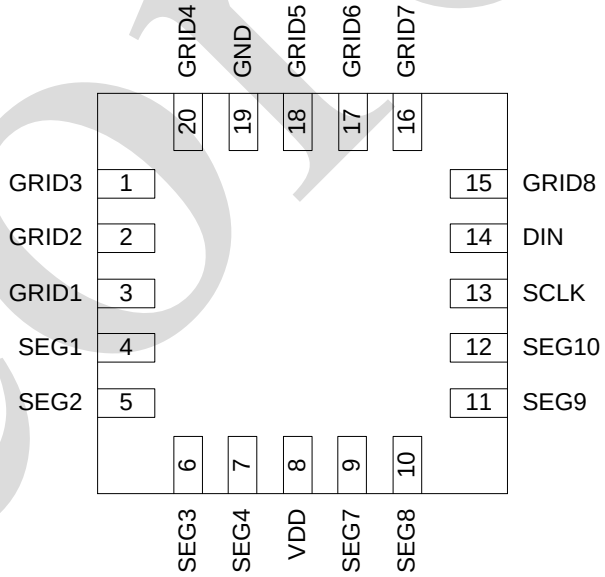

QFN20

2.3、Pin Description

Pin No.		Pin Name	IO	Description
SOP20 SSOP20	QFN20			
1	4	SEG1	O	LED constant current drive, SEG output
2	5	SEG2	O	LED constant current drive, SEG output
3	6	SEG3	O	LED constant current drive, SEG output
4	7	SEG4	O	LED constant current drive, SEG output
5	8	VDD	P	supply voltage
6	19	GND	P	ground
7	9	SEG7	O	LED constant current drive, SEG output
8	10	SEG8	O	LED constant current drive, SEG output
9	11	SEG9	O	LED constant current drive
10	12	SEG10	O	LED constant current drive
11	13	SCLK	I	serial interface clock
12	14	DIN	I	serial interface data
13	15	GRID8	O	LED common port, GRID output
14	16	GRID7	O	LED common port, GRID output
15	17	GRID6	O	LED common port, GRID output
16	18	GRID5	O	LED common port, GRID output
17	20	GRID4	O	LED common port, GRID output
18	1	GRID3	O	LED common port, GRID output
19	2	GRID2	O	LED common port, GRID output
20	3	GRID1	O	LED common port, GRID output

Note: P: powered by; I: input; O: output; F: floating.

3、Electrical Parameter

3.1、Absolute Maximum Ratings

(T_{amb}=25℃, unless otherwise specified)

Characteristic	Symbol	Conditions	Value	Unit
supply voltage	VDD	-	-0.5~+7.0	V
logic input voltage	V_{I1}	-	-0.5~VDD+0.5	V
SEG output current	I_{O1}	-	+30	mA
GRID output current	I_{O2}	-	-300	mA
power dissipation	P_D	-	450	mW
storage temperature	T_{stg}	-	-65~+150	℃
soldering temperature	T_L	10s	260	℃

3.2、Recommended Operating Conditions

Characteristic	Symbol	Min.	Typ.	Max.	Unit
logic supply voltage	VDD	4.5	5	5.5	V
HIGH-level input voltage	V_{IH}	0.7×VDD	-	VDD	V
LOW-level input voltage	V_{IL}	0	-	0.3×VDD	V
operating temperature	T_{amb}	-40	-	+85	℃

3.3、Electrical Characteristics

3.3.1、DC Characteristics

(T_{amb}=25℃, VDD=5V, unless otherwise specified)

Parameter	Symbol	Conditions	Min.	Typ.	Max.	Unit
logic supply voltage	VDD	-	3	5	5.5	V
Power on/off reset voltage	V_{PR}	-	-	2	-	V
HIGH-level input voltage	V_{IH}	-	0.7×VDD	-	VDD	V
LOW-level input voltage	V_{IL}	-	0	-	0.3×VDD	V
HIGH-level output current	I_{OH}	SEG Vo=VDD-1V	28	30	32	mA
LOW-level output current	I_{OL}	GRID Vo=0.3V	250	-	-	mA
HIGH-level input current	I_I	V_I=VDD	-1	-	+1	uA
input pull-up resistor	I_{RPH}	-	-	10	-	KΩ
dynamic current consumption	I_{DD}	-	-	-	5	mA
GRID scan time	T_{GST}	G_ST=00	185	285	385	us

3.3.2、AC Characteristics

(T_{amb}=25℃, VDD=5V, unless otherwise specified)

Parameter	Symbol	Conditions	Min.	Typ.	Max.	Unit
communication clock frequency	Fosc	SCLK, duty cycle=50%	-	1	-	MHz
data setup time	T_{setup}	-	100	-	-	ns
data hold time	T_{hold}	-	100	-	-	ns
propagation delay	T_{PLZ}	CLK→DIO CL=15pF	-	-	300	ns
	T_{PZL}		-	-	100	ns
rise time of output voltage	T_{TZH}	CL=300pF, GRID	-	-	2	us
		CL=300pF, SEG	-	-	0.5	us
fall time of output voltage	T_{THZ}	CL=300pF, GRID, SEG	-	-	120	us

4、Function Description

4.1、Communication Interface

Aip33620 provides a simplified IIC communication interface with the following features:

- SCLK and DIN two-wire communication, port built-in 10KΩ pull-up resistance
- same start and stop signs as the standard IIC interface
- no slave address required
- no handshake signal ACK bit is required
- 8 clocks per cycle, high bit first

4.1.1、Start And Stop Signs

AiP33620 detects the start and stop signs when the clock signal is HIGH.

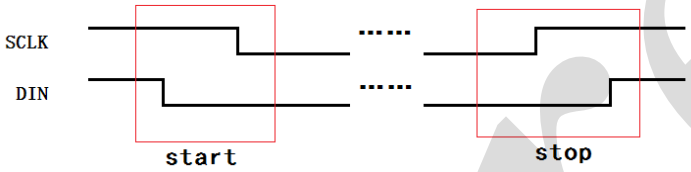

Figure 1. Start and stop signs waveforms

4.1.2、Single Byte Communication

The data can only be changed when the clock is LOW, otherwise there will be wrong start and stop signs. The waveform of single byte communication is shown in the figure below.

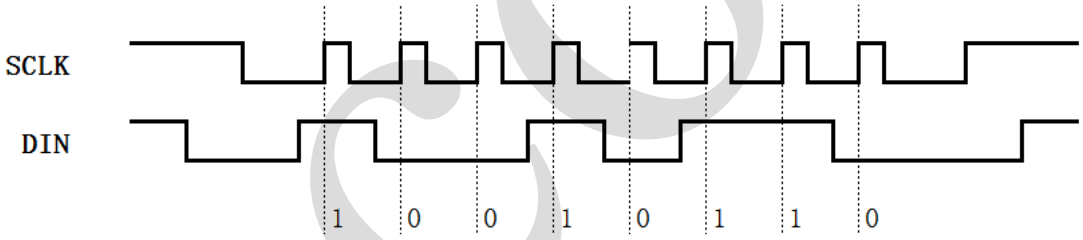

Figure 2. Single byte communication

Data is locked on the rising edge of the clock.

4.1.3、Multibyte Communication

AiP33620 can be used for multibyte continuous communication, that is, multiple bytes are continuously transmitted between a group of start and stop signs, as shown in the figure below.

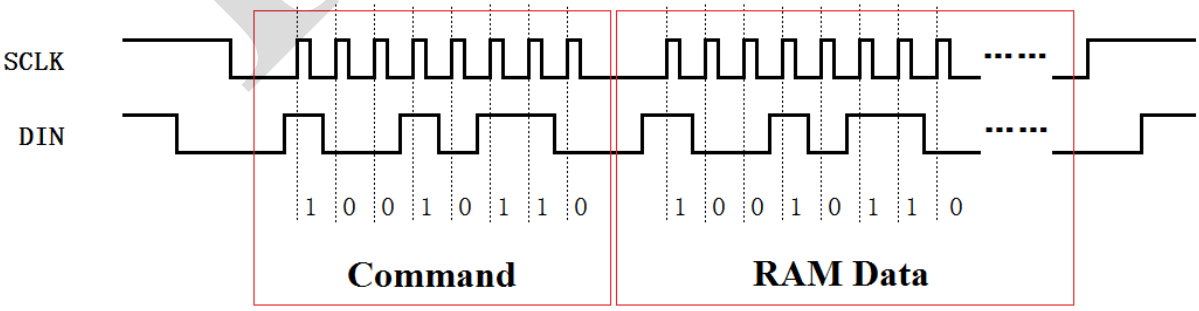

Figure 3. Two or more bytes of communication

In multibyte communication, the first byte is command, and the second byte is RAM data.
Starting from the second byte, the data will be stored in RAM from the address of 0x00.

4.2、Command System

4.2.1、Command Set

AiP33620 provides 5 commands for setting display related functions. The command set is as follows:

Number	Command	B7	B6	B5	B4	B3	B2	B1	B0
1	constant current setting 1	0	0	0	CURRENT[4:0]				
2	constant current setting 2	0	0	1	VGD	0	0	0	RAM_ADD[6]
3	dot matrix setting	0	1	G_N[2:0]			ADINC	T_E	T_S
4	display setting	1	0	G_ST[1:0]		DIS	G_O	G_DT[1:0]	
5	RAM address setting	1	1	RAM_ADDR[5:0]					

4.2.2、Constant Current Setting

Number	Command	B7	B6	B5	B4	B3	B2	B1	B0
1	constant current setting 1	0	0	0	CURRENT[4:0]				
2	constant current setting 2	0	0	1	VGD	0	0	0	X

VGD:

Reset value: 0

When the current is less than 10mA, it is recommended to set it to 1, which can improve the current accuracy.

When the current is greater than 10mA, it is recommended to set it to 0, which can adapt to the saturation voltage drop of various LEDs under larger current conditions.

CURRENT[4:0]:

Reset value: 00000

Set SEG output constant current size, current calculation formula

$$I_{SEG}=6.75mA+CURRENT\times0.745mA$$

The minimum setting is 00000, and the output instantaneous current is 6.75mA

The maximum setting is 11111, and the output instantaneous current is 29.85mA

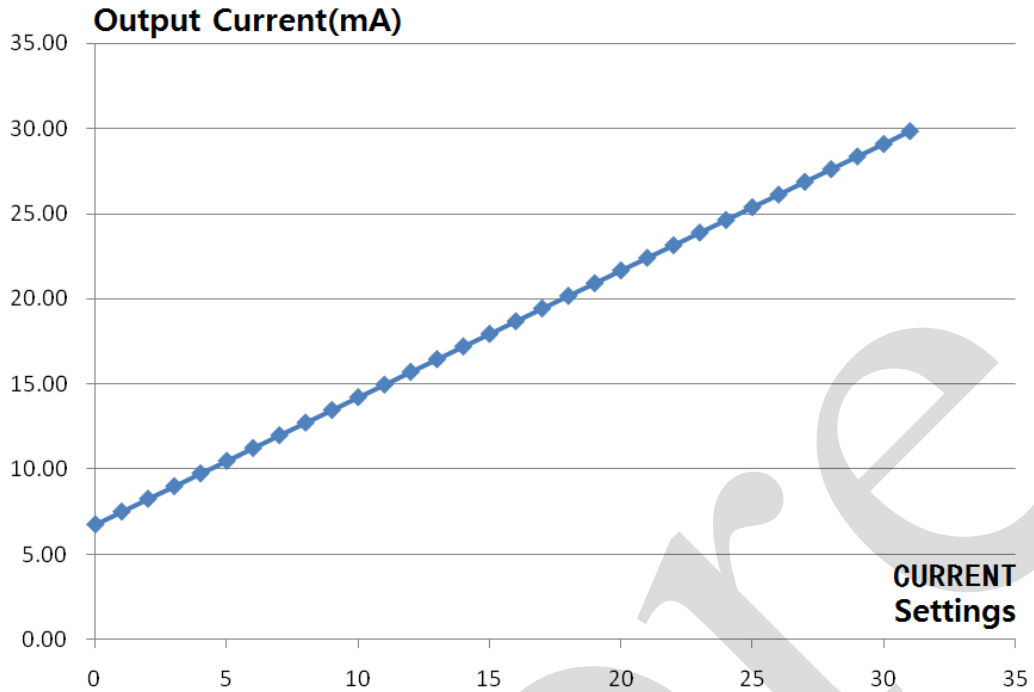

Figure 4. Relationship between CURRENT setting and SEG output current

Output average current needs to be calculated with G_N, G_ DT and data in the RAM, refer to chapter "**4.5、Calculation Of Output Average Current**".

4.2.3、Dot Matrix Setting

Number	Command	B7	B6	B5	B4	B3	B2	B1	B0
3	dot matrix setting	0	1	G_N[2:0]			ADINC	T_E	T_S

G_N[2:0]:

Reset value: 000

Select the valid quantity of GRID:

G_N[2:0] settings	Display format
000	GRID1 is valid, static display
001	GRID1~GRID2 are valid
010	GRID1~GRID3 are valid
011	GRID1~GRID4 are valid
100	GRID1~GRID5 are valid
101	GRID1~GRID6 are valid
110	GRID1~GRID7 are valid
111	GRID1~GRID8 are valid

After modifying the valid quantity of GRID each time, all data in the entire RAM must be reinitialized according to the updated valid RAM space.

ADINC:

Reset value: 0

Set 0, when writing to RAM, the RAM address will be automatically increased after writing a byte, and the self adding range is controlled by G_N. After adding to the last address, it will return the

address of 0x00, and then continue to increase automatically.

Set 1, the RAM address will not change when writing to RAM. At this time, the RAM address is controlled by RAM_ADDR of command number 5, and the operating range is not limited by G_N. The entire RAM space can always be operated.

T_E：

Reset value: 0

Set 0, work normally

Set 1, enter the test state, and the display is abnormal.

T_S：

Reset value: 0

Function control bit in test state, When T_E is set to 0, the value of T_S does not affect normal operation.

4.2.4、Display Setting

Number	Command	B7	B6	B5	B4	B3	B2	B1	B0
4	display setting	1	0	G_ST[1:0]		DIS	G_O	G_DT[1:0]	

FRAME[1:0]

Reset value: 00

Control GRID scan time, as shown in Figure 5

G_ST[1:0] settings	GRID scan time
00	285.52us
01	142.76us
10	71.38us
11	35.69us

DIS：

Reset value: 0

SEG enable control bit

After setting 1, SEG can be displayed normally (* refer to “4.4、Operation Control Flow” for the process of enabling display)

G_O：

Reset value: 0

SEG port blanking function switch control.

Set 1, start SEG port blanking function

G_DT[1:0]：

Reset value: 00

GRID scan interval control, as shown in Figure 5

G_DT[1:0] settings	GRID scan interval
0x	9/257×G_ST
10	13/257×G_ST
11	17/257×G_ST

Within the scan interval, the circuit automatically performs the blanking operation of GRID port.

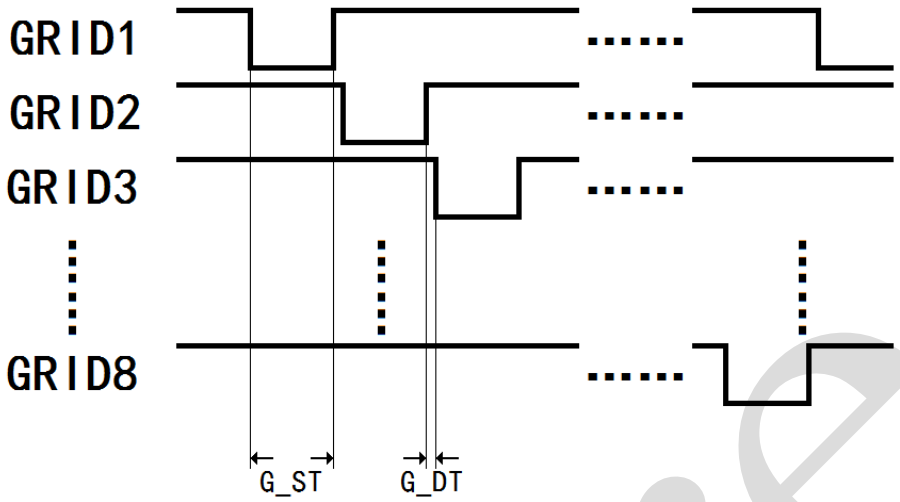

Figure 5. Schematic diagram of GRID scanning waveform

4.2.5、RAM Address Setting

Number	Command	B7	B6	B5	B4	B3	B2	B1	B0
5	RAM address setting	1	1	RAM_ADDR[5:0]					

RAM_ADDR[5:0]

Reset value: 000 000

When ADINC=1, RAM_ADDR is used to set the operation address of RAM.

When ADINC=0, RAM_ADDR can be set by communication, but the set value has no effect.

4.3、RAM

AiP33620 has 64×8 bit RAM, which is used to store display data.

RAM has 64 addresses with 8 bit data for each address. The data of each address is used to control the output duty cycle of one LED. Based on the total time of a GRID active LOW, when the data is set to 0x00 in the RAM, the duty cycle of the corresponding LED lighting time is 0/257; when the data is set to 0xFF in the RAM, the duty cycle of the corresponding LED lighting time is 255/257.

The corresponding relationship between RAM address and LED dot matrix is as follows:

Low Address / High Address	xxxx_000	xxxx_001	xxxx_010	xxxx_011	xxxx_100	xxxx_101	xxxx_110	xxxx_111
0000_xxx	G1S1	G2S1	G3S1	G4S1	G5S1	G6S1	G7S1	G8S1
0001_xxx	G1S2	G2S2	G3S2	G4S2	G5S2	G6S2	G7S2	G8S2
0010_xxx	G1S3	G2S3	G3S3	G4S3	G5S3	G6S3	G7S3	G8S3
0011_xxx	G1S4	G2S4	G3S4	G4S4	G5S4	G6S4	G7S4	G8S4
0100_xxx	-	-	-	-	-	-	-	-
0101_xxx	-	-	-	-	-	-	-	-
0110_xxx	G1S7	G2S7	G3S7	G4S7	G5S7	G6S7	G7S7	G8S7
0111_xxx	G1S8	G2S8	G3S8	G4S8	G5S8	G6S8	G7S8	G8S8
1000_xxx	G1S9	G2S9	G3S9	G4S9	G5S9	G6S9	G7S9	G8S9
1001_xxx	G1S10	G2S10	G3S10	G4S10	G5S10	G6S10	G7S10	G8S10

Note: GnSn stands for cathode connected to GRIDn, anode connected to SEGn LED.

The RAM storage space of the address range 0x20~0x2F actually exists, and the address self increasing will also pass through these addresses. However, since there is no corresponding SEG driver port, writing data in this range will not affect the function of the circuit.

The corresponding relationship between the data in RAM and the duty cycle of LED lighting time:

Data in RAM	Corresponding LED Lighting Time Duty Cycle
0x00	0/257
0x01	1/257
0x02	2/257
……	……
0xFE	254/257
0xFF	255/257

If ADINC is set to 0, the RAM address of each write operation must start from 0x00, and the RAM address will be automatically increased by 1 after each address is written.

The range of RAM address self increasing will change with varies G_N[2:0] settings, according to G_N[2:0], AiP33620 skips unused RAM addresses.

If G_N[2:0]=111, the range of address self adding is 0x00~0x4F. When the address 0x4F is written, the address will return to 0x00 again.

If G_N[2:0]=110, the range of address self adding will automatically skip the address related to GRID8, that is, the address is automatically added from 0x00 to 0x06, followed by the address of 0x08~0x0E, followed by the address of 0x10~0x16, etc.

This feature makes it possible to refresh the graphic data of the whole dot matrix continuously without inserting additional data when setting a dot matrix of any size.

If ADINC is set to 1, the RAM address is controlled by RAM_ADDR[5:0] when writing to RAM. At this time, the RAM address will not be limited by G_N [2:0] settings. All addresses of the whole RAM can be accessed at any time.

Because AiP33620 has 256 steps of PWM adjustment ability, the use of grayscale correction effect to control the PWM duty cycle change, can manually achieve the control effect similar to breathing light. This results in a reduced number of steps for the LED intensity setting, but causes the change in intensity to appear more linear to the human eye.

GAMMA correction, also known as GAMMA compression or encoding, is used to encode linear luminance to match the non-linear characteristics of display. Since AiP33620 has the function of adjusting PWM point by point, a GAMMA correction function can be applied when computing each subsequent LED intensity setting such that the changes in brightness matches the human eye's brightness curve.

Choosing more gamma steps provides for a more continuous looking breathing effect. This is useful for very long breathing cycles. The recommended configuration is defined by the breath cycle T. When T=1s, choose 32 gamma steps, when T=2s, choose 64 gamma steps. The user must decide the final number of gamma steps not only by the LED itself, but also based on the visual performance of the finished product.

A breathing cycle refers to the time taken to complete a change from the darkest to the brightest (or vice versa).

C(0)	C(1)	C(2)	C(3)	C(4)	C(5)	C(6)	C(7)
0	1	2	4	6	10	13	18
C(8)	C(9)	C(10)	C(11)	C(12)	C(13)	C(14)	C(15)
22	28	33	39	46	53	61	69
C(16)	C(17)	C(18)	C(19)	C(20)	C(21)	C(22)	C(23)
78	86	96	106	116	126	138	149
C(24)	C(25)	C(26)	C(27)	C(28)	C(29)	C(30)	C(31)
161	173	186	199	212	226	240	255

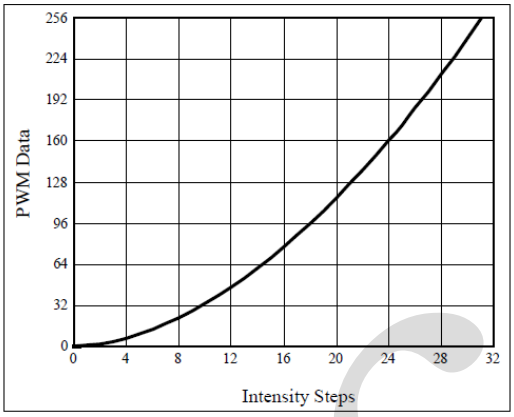

Gamma Correction (32 Steps)

C(0)	C(1)	C(2)	C(3)	C(4)	C(5)	C(6)	C(7)
0	1	2	3	4	5	6	7
C(8)	C(9)	C(10)	C(11)	C(12)	C(13)	C(14)	C(15)
8	10	12	14	16	18	20	22
C(16)	C(17)	C(18)	C(19)	C(20)	C(21)	C(22)	C(23)
24	26	29	32	35	38	41	44
C(24)	C(25)	C(26)	C(27)	C(28)	C(29)	C(30)	C(31)
47	50	53	57	61	65	69	73
C(32)	C(33)	C(34)	C(35)	C(36)	C(37)	C(38)	C(39)
77	81	85	89	94	99	104	109
C(40)	C(41)	C(42)	C(43)	C(44)	C(45)	C(46)	C(47)
114	119	124	129	134	140	146	152
C(48)	C(49)	C(50)	C(51)	C(52)	C(53)	C(54)	C(55)
158	164	170	176	182	188	195	202
C(56)	C(57)	C(58)	C(59)	C(60)	C(61)	C(62)	C(63)
209	216	223	230	237	244	251	255

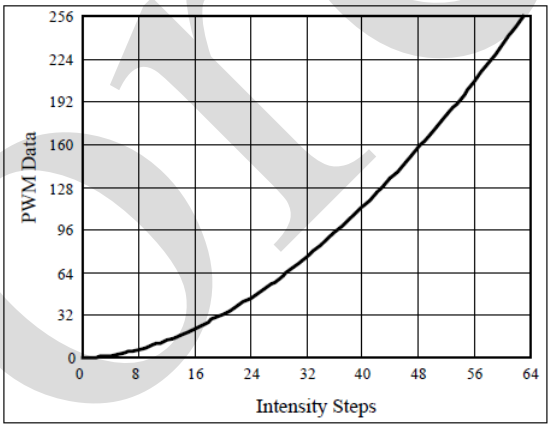

Gamma Correction (64 Steps)

4.4、Operation Control Flow

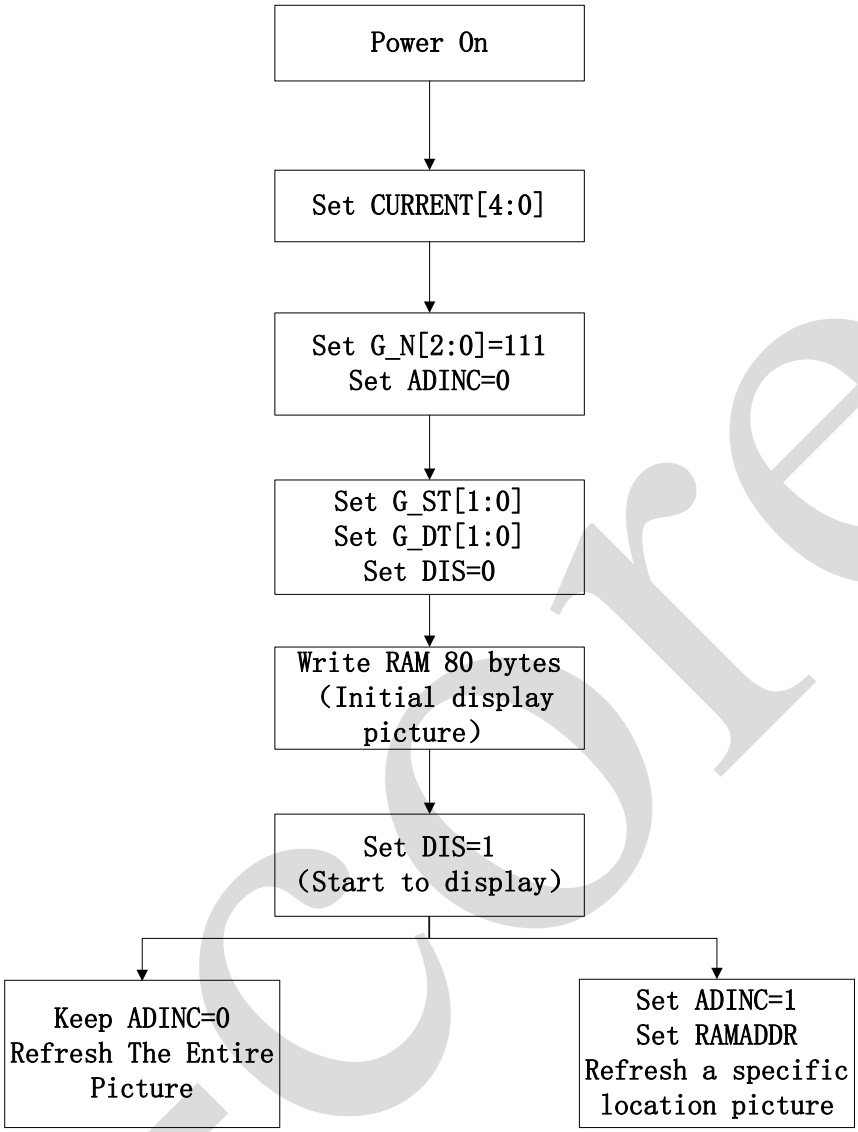

Figure 6. Recommended power on configuration process

In order to prevent the random display of LED dot matrix in the process of power on, AiP33620 has a certain prevention mechanism, which requires that 80 addresses of the entire RAM space must be filled when initializing the display graphics in the control process.

After modifying the valid quantity of GRID each time, all data in the entire RAM must be reinitialized according to the updated valid RAM space.

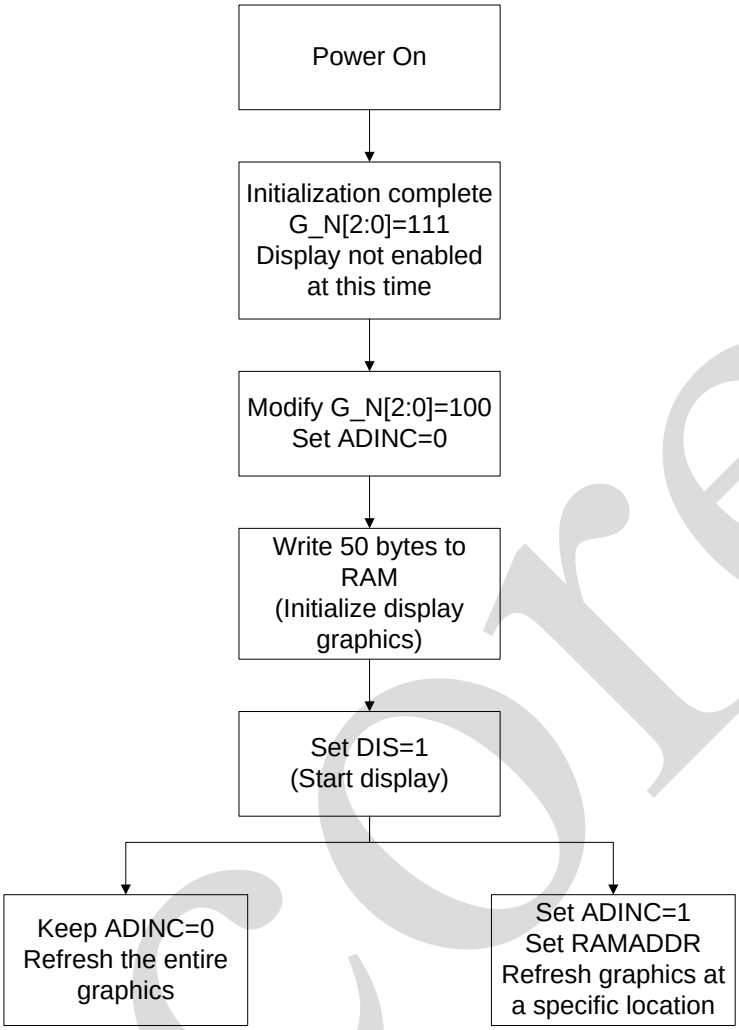

Figure 7. Recommended procedure for modifying valid GRID quantity

4.5、Calculation Of Output Average Current

If:

The instantaneous current set by CURRENT[4:0] is I_{MAX}

The number of valid GRID set by G_N [2:0] is n

The Scanning interval time set by G_DT [1:0] is a/257×G_ST

The duty cycle of a LED in RAM is set to b/257×G_ST

Then the average current on the corresponding LED is $I_{average}=I_{MAX}\times b/(n\times(257+a))$

E. g:

CURRENT[4:0]=11111, i.e. I_{MAX}=30mA

G_N[2:0]=111, that is, n=8

G_DT[1:0]=00, that is, a=9

Data in RAM is 0xFF, i.e. b=255

Then $I_{average}$=30mA×255/(8×(257+9))=3.595mA

5、Typical Application Circuit And Application Note

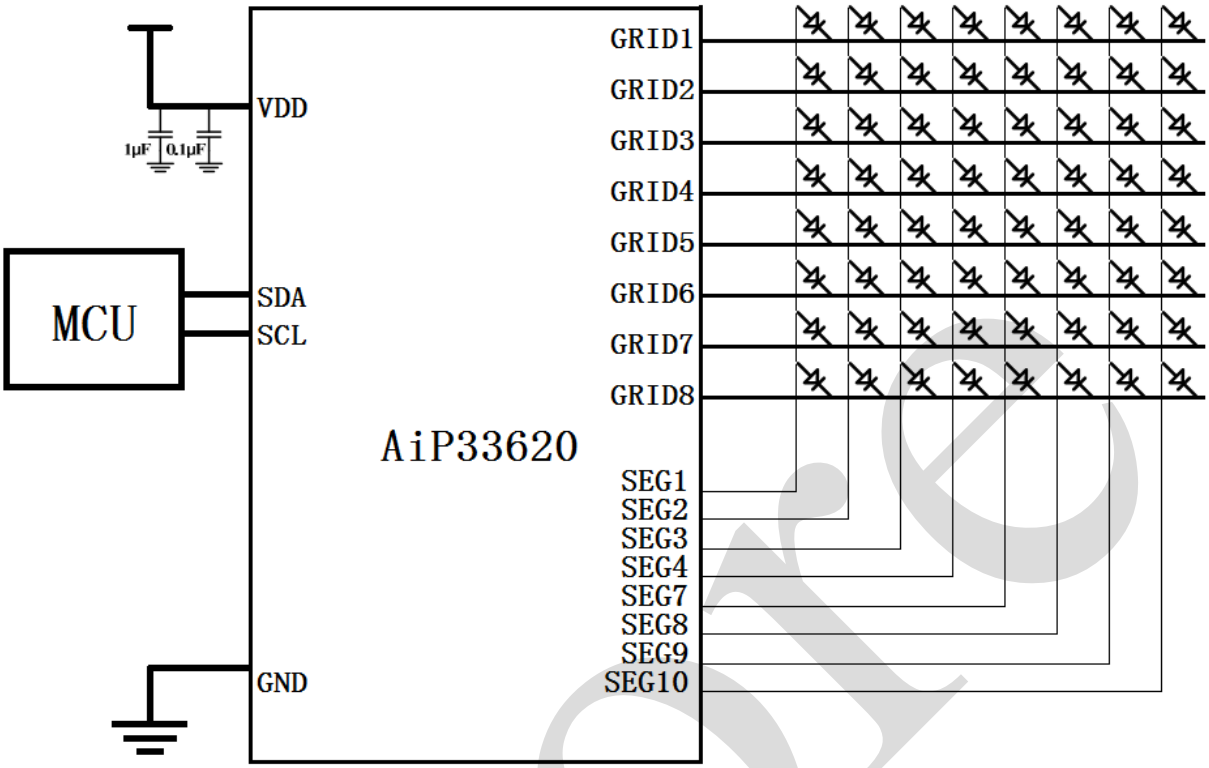

*Note:

When ADINC=0, if data is continuously written to fill the entire set address range, the circuit will immediately stop displaying the current frame and restart display from GRID1. Compared to normal scanning this process lacks the blanking procedure. Therefore, when the hardware design involves significant trace capacitance, it may cause brief flickering in the LED positions corresponding to GRID1~SEG.

The following two solutions address this issue:

1. When hardware does not utilize all LED positions:

- Do not connect LEDs between the last valid GRID and SEG10.
- When continuously writing RAM data within the set address range, skip writing the last address.

Example: When G_N[2:0]=011 (40 valid addresses), do not connect LEDs between GRID4 and SEG10, and write only 39 data entries.

2. When hardware requires full LED utilization:

- Set ADINC=1 and write data using single-address writing mode.

6、Package Information

6.1、SOP20

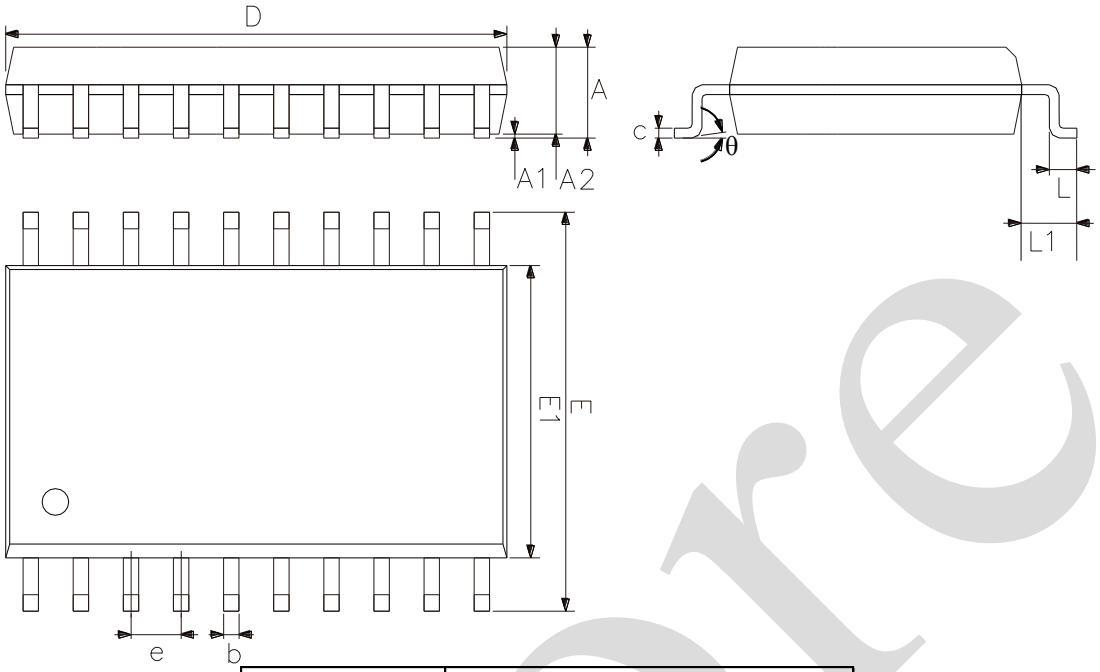

2023/12/A	Dimensions In Millimeters	
Symbol	**Min.**	**Max.**
A	2.47	2.65
A1	0.05	0.30
A2	2.20	2.44
b	0.35	0.50
c	0.15	0.30
D	12.54	12.94
E	10.00	10.60
E1	7.30	7.70
e	1.27	
L	0.40	1.05
L1	1.30	1.50
θ	0°	8°

i-core

6.2、SSOP20

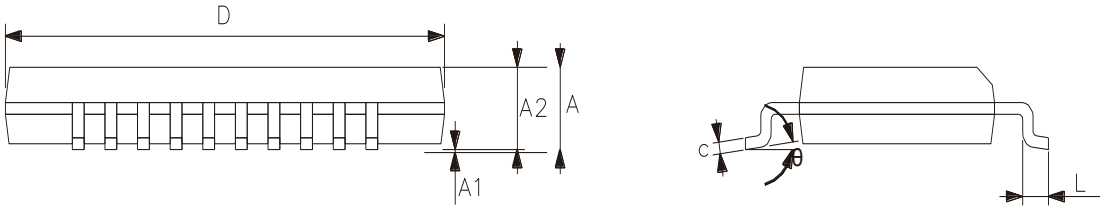

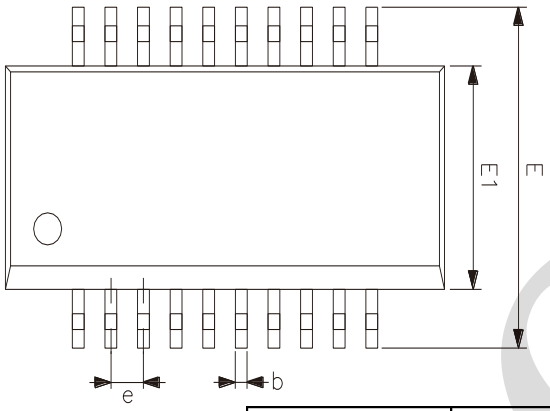

2023/12/A	Dimensions In Millimeters	
Symbol	**Min**	**Max**
A	—	1.75
A1	0.10	0.25
A2	1.30	1.55
b	0.23	0.31
c	0.19	0.25
D	8.50	8.75
E	5.80	6.20
E1	3.80	4.00
e	0.635	
L	0.40	0.80
θ	0°	8°

i-core

6.3、QFN20 (3*3)

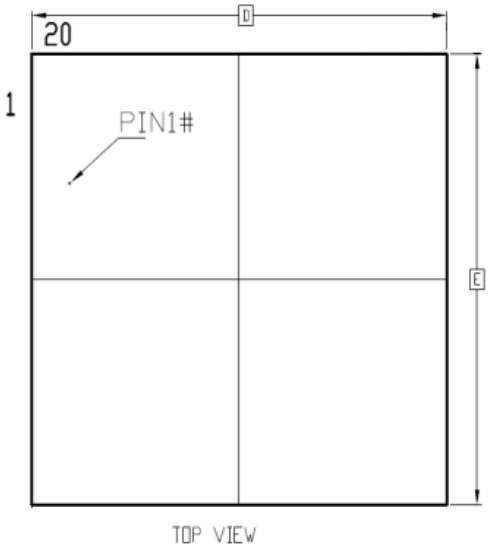

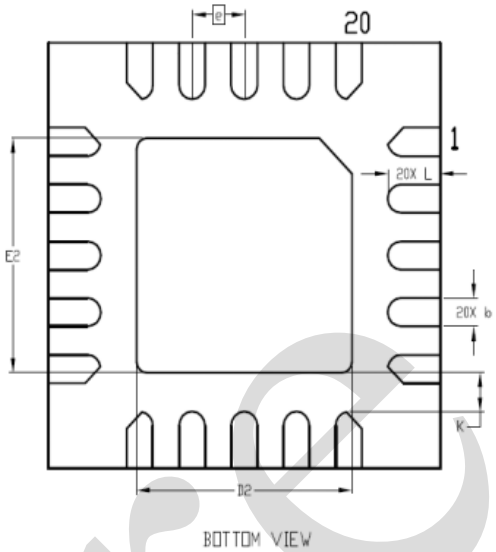

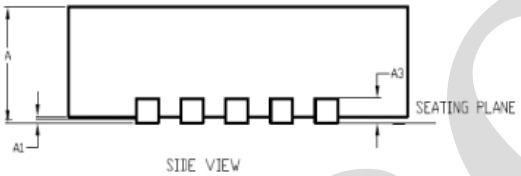

2023/12/A	Dimensions In Millimeters	
Symbol	**Min**	**Max**
A	0.70	0.80
A1	0	0.05
A3	0.18	0.25
b	0.15	0.25
D	2.90	3.10
E	2.90	3.10
D2	1.55	1.75
E2	1.55	1.75
e	0.40	
L	0.35	0.45

i-core

7、Statements And Notes

7.1、The name and content of Hazardous substances or Elements in the product

Part name	Hazardous substances or Elements									
	Lead and lead compounds	Mercury and mercury compounds	Cadmium and cadmium compounds	Hexavalent chromium compounds	Polybrominated biphenyls	Polybrominated biphenyl ethers	Dibutyl phthalate	Butylbenzyl phthalate	Di-2-ethylhexyl phthalate	Diisobutyl phthalate
Lead frame	○	○	○	○	○	○	○	○	○	○
Plastic resin	○	○	○	○	○	○	○	○	○	○
Chip	○	○	○	○	○	○	○	○	○	○
The lead	○	○	○	○	○	○	○	○	○	○
Plastic sheet installed	○	○	○	○	○	○	○	○	○	○
explanation	○: Indicates that the content of hazardous substances or elements in the detection limit of the following the SJ/T11363-2006 standard. ×: Indicates that the content of hazardous substances or elements exceeding the SJ/T11363-2006 Standard limit requirements.									

7.2、Notes

We recommend you to read this chapter carefully before using this product.

The information in this chapter is provided for reference only and i-Core disclaims any express or implied warranties, including but not limited to applicability, special application or non-infringement of third party rights.

This product is not suitable for critical equipment such as life-saving, life-sustaining or safety equipment. It is also not suitable for applications that may result in personal injury, death, or serious property or environmental damage due to product malfunction or failure. I-Core will not be liable for any damages incurred by the customers at their own risk for such applications.

The customer is responsible for conducting all necessary tests i-Core's application to avoid failure in the application or the application of the customer' s third party users. I-Core does not accept any liability.

The Company reserves the right to change or improve the information published in this chapter at any time. The information in this chapter are subject to change without notice. We recommend the customer to consult our sales staff before purchasing.

Please obtain related materials form i-Core's regular channels and we are not responsible for its content if it is provided by sources other than our company.

In case of any conflict between the Chinese and English version, the version is subject to the Chinese one.