AiP74HC/HCT245
Octal Bus Transceiver; 3-state

Product Specification

Specification Revision History:

Version	Date	Description
2012-06-A1	2012-06	New
2023-04-B1	2023-04	Update the template
2025-06-B2	2025-06	Add QFN20 package form
2026-01-B3	2026-01	Add electrostatic discharge

Contents

1、General Description 3

2、Block Diagram And Pin Description 6

2.1、Block Diagram 6

2.2、Pin Configurations 7

2.3、Pin Description 7

2.4、Function Table 8

3、Electrical Parameter 8

3.1、Absolute Maximum Ratings 8

3.2、Recommended Operating Conditions 8

3.3、Electrical Characteristics 9

3.3.1、DC Characteristics 1 9

3.3.2、DC Characteristics 2 10

3.3.3、DC Characteristics 3 11

3.3.4、AC Characteristics 1 12

3.3.5、AC Characteristics 2 13

3.3.6、AC Characteristics 3 14

4、Testing Circuit 15

4.1、AC Testing Circuit 15

4.2、AC Testing Waveforms 15

4.3、Measurement Points 16

4.4、Test Data 16

5、Package Information 17

5.1、DIP20 17

5.2、SOP20 18

5.3、TSSOP20 19

5.4、DHVQFN20 20

5.5、QFN20 21

6、Statements And Notes 22

6.1、The name and content of Hazardous substances or Elements in the product 22

6.2、Notes 22

i-core

1、General Description

The AiP74HC/HCT245 is an 8-bit transceiver with 3-state outputs. The device features an output enable ($\overline{OE}$) and send/receive (DIR) for direction control. A HIGH on $\overline{OE}$ causes the outputs to assume a high-impedance OFF-state. Inputs include clamp diodes. This enables the use of current limiting resistors to interface inputs to voltages in excess of V_{CC}.

Features:

- Input levels:
  For AiP74HC245: CMOS level
  For AiP74HCT245: TTL level
- Octal bidirectional bus interface
- Non-inverting 3-state outputs
- Specified from -40℃ to +125℃
- Packaging information: DIP20/SOP20/TSSOP20/DHVQFN20/QFN20

i-core

Ordering Information:

Tube packing specifications:

Part number	Packaging form	Marking code	Tube quantity	Boxed tube quantity	Boxed quantity	Notes
AiP74HC245DA20.TB	DIP20	74HC245	18 PCS/tube	40 tube/box	720 PCS/box	Dimensions of plastic enclosure: 26.3mm×6.4mm Pin spacing: 2.54mm
AiP74HCT245DA20.TB	DIP20	74HCT245	18 PCS/tube	40 tube/box	720 PCS/box	Dimensions of plastic enclosure: 26.3mm×6.4mm Pin spacing: 2.54mm
AiP74HC245SA20.TB	SOP20	74HC245	35 PCS/tube	80 tube/box	2800 PCS/box	Dimensions of plastic enclosure: 12.8mm×7.5mm Pin spacing: 1.27mm
AiP74HCT245SA20.TB	SOP20	74HCT245	35 PCS/tube	80 tube/box	2800 PCS/box	Dimensions of plastic enclosure: 12.8mm×7.5mm Pin spacing: 1.27mm
AiP74HC245TA20.TB	TSSOP20	74HC245	70 PCS/tube	200 tube/box	14000 PCS/box	Dimensions of plastic enclosure: 6.5mm×4.4mm Pin spacing: 0.65mm
AiP74HCT245TA20.TB	TSSOP20	74HCT245	70 PCS/tube	200 tube/box	14000 PCS/box	Dimensions of plastic enclosure: 6.5mm×4.4mm Pin spacing: 0.65mm

i-core

Reel packing specifications:

Part number	Packaging form	Marking code	Reel quantity	Boxed reel quantity	Notes
AiP74HC245SA20.TR	SOP20	74HC245	2000PCS/reel	2000PCS/box	Dimensions of plastic enclosure: 12.8mm×7.5mm Pin spacing: 1.27mm
AiP74HCT245SA20.TR	SOP20	74HCT245	2000PCS/reel	2000PCS/box	Dimensions of plastic enclosure: 12.8mm×7.5mm Pin spacing: 1.27mm
AiP74HC245TA20.TR	TSSOP20	74HC245	4000PCS/reel	8000PCS/box	Dimensions of plastic enclosure: 6.5mm×4.4mm Pin spacing: 0.65mm
AiP74HCT245TA20.TR	TSSOP20	74HCT245	4000PCS/reel	8000PCS/box	Dimensions of plastic enclosure: 6.5mm×4.4mm Pin spacing: 0.65mm
AiP74HC245QE20.TR	DHVQFN20	74HC245	3000PCS/reel	3000PCS/box	Dimensions of plastic enclosure: 4.5mm×2.5mm Pin spacing: 0.50mm
AiP74HCT245QE20.TR	DHVQFN20	74HCT245	3000PCS/reel	3000PCS/box	Dimensions of plastic enclosure: 4.5mm×2.5mm Pin spacing: 0.50mm
AiP74HC245QB20.TR	QFN20	74HC245	4000PCS/reel	8000PCS/box	Dimensions of plastic enclosure: 4.0mm×4.0mm Pin spacing: 0.50mm
AiP74HCT245QB20.TR	QFN20	74HCT245	4000PCS/reel	8000PCS/box	Dimensions of plastic enclosure: 4.0mm×4.0mm Pin spacing: 0.50mm

Note: If the physical information is inconsistent with the ordering information, please refer to the actual product.

i-core

2、Block Diagram And Pin Description

2.1、Block Diagram

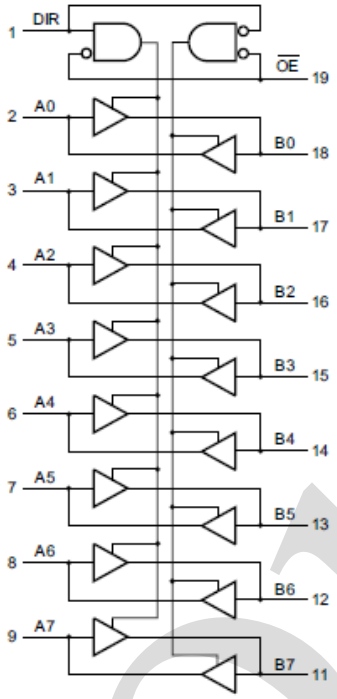

Figure 1. Logic symbol

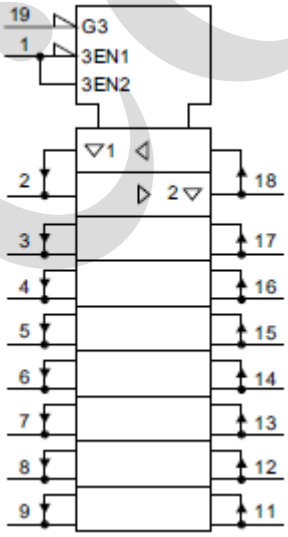

Figure 2. IEC logic symbol

2.2、Pin Configurations

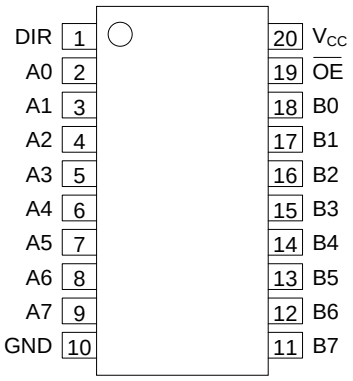

DIP20/SOP20/TSSOP20

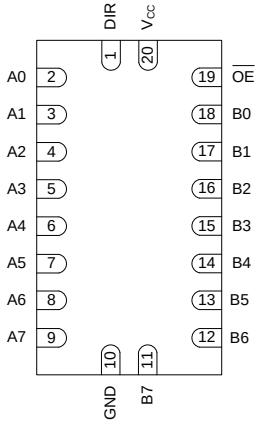

DHVQFN20

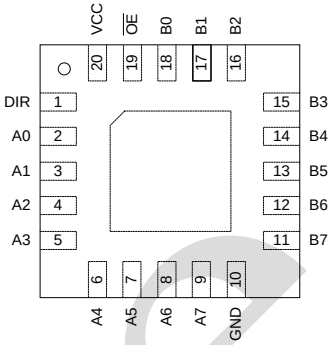

QFN20

2.3、Pin Description

Pin No.	Pin Name	Description
1	DIR	direction control
2	A0	data input/output
3	A1	data input/output
4	A2	data input/output
5	A3	data input/output
6	A4	data input/output
7	A5	data input/output
8	A6	data input/output
9	A7	data input/output
10	GND	ground (0V)
11	B7	data input/output
12	B6	data input/output
13	B5	data input/output
14	B4	data input/output
15	B3	data input/output
16	B2	data input/output
17	B1	data input/output
18	B0	data input/output
19	$\overline{OE}$	output enable input (active LOW)
20	V_{CC}	supply voltage

2.4、Function Table

Input		Output	
$\overline{OE}$	DIR	An	Bn
L	L	A=B	input
L	H	input	B=A
H	X	Z	Z

Note: H=HIGH voltage level; L=LOW voltage level; X=don't care; Z=high-impedance OFF-state.

3、Electrical Parameter

3.1、Absolute Maximum Ratings

(Voltages are referenced to GND (ground=0V), unless otherwise specified.)

Parameter	Symbol	Conditions		Min.	Max.	Unit
supply voltage	V_{CC}	-		-0.5	+7.0	V
input clamping current	I_{IK}	$V_I < -0.5V$ or $V_I > V_{CC}+0.5V$		-	±20	mA
output clamping current	I_{OK}	$V_O < -0.5V$ or $V_O > V_{CC}+0.5V$		-	±20	mA
output current	I_O	$-0.5V < V_O < V_{CC}+0.5V$		-	±35	mA
supply current	I_{CC}	-		-	70	mA
ground current	I_{GND}	-		-70	-	mA
storage temperature	T_{stg}	-		-65	+150	℃
total power dissipation	P_{tot}	-		-	500	mW
soldering temperature	T_L	10s	DIP	245		℃
			SOP/TSSOP/DHVQFN/QFN	260		℃
electrostatic discharge	ESD	HBM		5500		V
		CDM		1000		V

3.2、Recommended Operating Conditions

Parameter	Symbol	Conditions	Min.	Typ.	Max.	Unit
AiP74HC245						
supply voltage	V_{CC}	-	2.0	5.0	6.0	V
input voltage	V_I	-	0	-	V_{CC}	V
output voltage	V_O	-	0	-	V_{CC}	V
input transition rise and fall rate	Δt/ΔV	V_{CC}=2.0V	-	-	625	ns/V
		V_{CC}=4.5V	-	1.67	139	ns/V
		V_{CC}=6.0V	-	-	83	ns/V
ambient temperature	T_{amb}	-	-40	-	+125	℃
AiP74HCT245						
supply voltage	V_{CC}	-	4.5	5.0	5.5	V
input voltage	V_I	-	0	-	V_{CC}	V
output voltage	V_O	-	0	-	V_{CC}	V
input transition rise and fall rate	Δt/ΔV	V_{CC}=4.5V	-	1.67	139	ns/V
ambient temperature	T_{amb}	-	-40	-	+125	℃

3.3、Electrical Characteristics

3.3.1、DC Characteristics 1

(T_{amb}=25℃, voltages are referenced to GND (ground=0V), unless otherwise specified.)

Parameter	Symbol	Conditions		Min.	Typ.	Max.	Unit
AiP74HC245							
HIGH-level input voltage	V_{IH}	V_{CC}=2.0V		1.5	1.2	-	V
		V_{CC}=4.5V		3.15	2.4	-	V
		V_{CC}=6.0V		4.2	3.2	-	V
LOW-level input voltage	V_{IL}	V_{CC}=2.0V		-	0.8	0.5	V
		V_{CC}=4.5V		-	2.1	1.35	V
		V_{CC}=6.0V		-	2.8	1.8	V
HIGH-level output voltage	V_{OH}	V_I=V_{IH} or V_{IL}	I_O=-20uA; V_{CC}=2.0V	1.9	2.0	-	V
			I_O=-20uA; V_{CC}=4.5V	4.4	4.5	-	V
			I_O=-20uA; V_{CC}=6.0V	5.9	6.0	-	V
			I_O=-6.0mA; V_{CC}=4.5V	3.98	4.32	-	V
			I_O=-7.8mA; V_{CC}=6.0V	5.48	5.81	-	V
LOW-level output voltage	V_{OL}	V_I=V_{IH} or V_{IL}	I_O=20uA; V_{CC}=2.0V	-	0	0.1	V
			I_O=20uA; V_{CC}=4.5V	-	0	0.1	V
			I_O=20uA; V_{CC}=6.0V	-	0	0.1	V
			I_O=6.0mA; V_{CC}=4.5V	-	0.15	0.26	V
			I_O=7.8mA; V_{CC}=6.0V	-	0.16	0.26	V
input leakage current	I_I	V_I=V_{CC} or GND; V_{CC}=6.0V		-	-	±1.0	uA
OFF-state output current	I_{OZ}	V_I=V_{IH} or V_{IL}; V_{CC}=6.0V; V_O=V_{CC} or GND		-	-	±1.0	uA
supply current	I_{CC}	V_I=V_{CC} or GND; I_O=0A; V_{CC}=6.0V		-	-	8.0	uA
input capacitance	C_I	-		-	3.5	-	pF
input/output capacitance	$C_{I/O}$	-		-	10	-	pF
AiP74HCT245							
HIGH-level input voltage	V_{IH}	V_{CC}=4.5V to 5.5V		2.0	1.6	-	V
LOW-level input voltage	V_{IL}	V_{CC}=4.5V to 5.5V		-	1.2	0.8	V
HIGH-level output voltage	V_{OH}	V_I=V_{IH} or V_{IL}; V_{CC}=4.5V	I_O=-20uA	4.4	4.5	-	V
			I_O=-6.0mA	3.98	4.32	-	V
LOW-level output voltage	V_{OL}	V_I=V_{IH} or V_{IL}; V_{CC}=4.5V	I_O=20uA	-	0	0.1	V
			I_O=6.0mA	-	0.15	0.26	V
input leakage current	I_I	V_I=V_{CC} or GND; V_{CC}=5.5V		-	-	±1.0	uA
OFF-state output current	I_{OZ}	V_I=V_{IH} or V_{IL}; V_{CC}=5.5V; V_O=V_{CC} or GND		-	-	±1.0	uA
supply current	I_{CC}	V_I=V_{CC} or GND; I_O=0A; V_{CC}=5.5V		-	-	8.0	uA
additional supply current	ΔI_{CC}	per input pin; V_I=V_{CC}-2.1V; other inputs at V_{CC}	An or Bn inputs	-	-	144	uA
			$\overline{OE}$ input	-	-	540	uA

		or GND; V_{CC}=4.5V to 5.5V; I_O=0A	DIR input	-	-	324	uA
input capacitance	C_I	-		-	3.5	-	pF
input/output capacitance	$C_{I/O}$	-		-	10	-	pF

3.3.2、DC Characteristics 2

(T_{amb}=-40℃ to +85℃, voltages are referenced to GND (ground=0V), unless otherwise specified.)

Parameter	Symbol	Conditions		Min.	Typ.	Max.	Unit
AiP74HC245							
HIGH-level input voltage	V_{IH}	V_{CC}=2.0V		1.5	-	-	V
		V_{CC}=4.5V		3.15	-	-	V
		V_{CC}=6.0V		4.2	-	-	V
LOW-level input voltage	V_{IL}	V_{CC}=2.0V		-	-	0.5	V
		V_{CC}=4.5V		-	-	1.35	V
		V_{CC}=6.0V		-	-	1.8	V
HIGH-level output voltage	V_{OH}	V_I=V_{IH} or V_{IL}	I_O=-20uA; V_{CC}=2.0V	1.9	-	-	V
			I_O=-20uA; V_{CC}=4.5V	4.4	-	-	V
			I_O=-20uA; V_{CC}=6.0V	5.9	-	-	V
			I_O=-6.0mA; V_{CC}=4.5V	3.84	-	-	V
			I_O=-7.8mA; V_{CC}=6.0V	5.34	-	-	V
LOW-level output voltage	V_{OL}	V_I=V_{IH} or V_{IL}	I_O=20uA; V_{CC}=2.0V	-	-	0.1	V
			I_O=20uA; V_{CC}=4.5V	-	-	0.1	V
			I_O=20uA; V_{CC}=6.0V	-	-	0.1	V
			I_O=6.0mA; V_{CC}=4.5V	-	-	0.33	V
			I_O=7.8mA; V_{CC}=6.0V	-	-	0.33	V
input leakage current	I_I	V_I=V_{CC} or GND; V_{CC}=6.0V		-	-	±1.0	uA
OFF-state output current	I_{OZ}	V_I=V_{IH} or V_{IL}; V_{CC}=6.0V; V_O=V_{CC} or GND		-	-	±5.0	uA
supply current	I_{CC}	V_I=V_{CC} or GND; I_O=0A; V_{CC}=6.0V		-	-	80	uA
AiP74HCT245							
HIGH-level input voltage	V_{IH}	V_{CC}=4.5V to 5.5V		2.0	-	-	V
LOW-level input voltage	V_{IL}	V_{CC}=4.5V to 5.5V		-	-	0.8	V
HIGH-level output voltage	V_{OH}	V_I=V_{IH} or V_{IL}; V_{CC}=4.5V	I_O=-20uA	4.4	-	-	V
			I_O=-6.0mA	3.84	-	-	V
LOW-level output voltage	V_{OL}	V_I=V_{IH} or V_{IL}; V_{CC}=4.5V	I_O=20uA	-	-	0.1	V
			I_O=6.0mA	-	-	0.33	V
input leakage current	I_I	V_I=V_{CC} or GND; V_{CC}=5.5V		-	-	±1.0	uA
OFF-state output current	I_{OZ}	V_I=V_{IH} or V_{IL}; V_{CC}=5.5V; V_O=V_{CC} or GND		-	-	±5.0	uA
supply current	I_{CC}	V_I=V_{CC} or GND; I_O=0A; V_{CC}=5.5V		-	-	80	uA
additional	ΔI_{CC}	per input pin;	An or Bn inputs	-	-	180	uA

supply current		V_I=V_{CC}-2.1V; other inputs at V_{CC} or GND; V_{CC}=4.5V to 5.5V; I_O=0A	$\overline{OE}$ input	-	-	675	uA
			DIR input	-	-	405	uA

3.3.3、DC Characteristics 3

(T_{amb}=-40℃ to +125℃, voltages are referenced to GND (ground=0V), unless otherwise specified.)

Parameter	Symbol	Conditions		Min.	Typ.	Max.	Unit
AiP74HC245							
HIGH-level input voltage	V_{IH}	V_{CC}=2.0V		1.5	-	-	V
		V_{CC}=4.5V		3.15	-	-	V
		V_{CC}=6.0V		4.2	-	-	V
LOW-level input voltage	V_{IL}	V_{CC}=2.0V		-	-	0.5	V
		V_{CC}=4.5V		-	-	1.35	V
		V_{CC}=6.0V		-	-	1.8	V
HIGH-level output voltage	V_{OH}	V_I=V_{IH} or V_{IL}	I_O=-20uA; V_{CC}=2.0V	1.9	-	-	V
			I_O=-20uA; V_{CC}=4.5V	4.4	-	-	V
			I_O=-20uA; V_{CC}=6.0V	5.9	-	-	V
			I_O=-6.0mA; V_{CC}=4.5V	3.7	-	-	V
			I_O=-7.8mA; V_{CC}=6.0V	5.2	-	-	V
LOW-level output voltage	V_{OL}	V_I=V_{IH} or V_{IL}	I_O=20uA; V_{CC}=2.0V	-	-	0.1	V
			I_O=20uA; V_{CC}=4.5V	-	-	0.1	V
			I_O=20uA; V_{CC}=6.0V	-	-	0.1	V
			I_O=6.0mA; V_{CC}=4.5V	-	-	0.4	V
			I_O=7.8mA; V_{CC}=6.0V	-	-	0.4	V
input leakage current	I_I	V_I=V_{CC} or GND; V_{CC}=6.0V		-	-	±1.0	uA
OFF-state output current	I_{OZ}	V_I=V_{IH} or V_{IL}; V_{CC}=6.0V; V_O=V_{CC} or GND		-	-	±10	uA
supply current	I_{CC}	V_I=V_{CC} or GND; I_O=0A; V_{CC}=6.0V		-	-	160	uA
AiP74HCT245							
HIGH-level input voltage	V_{IH}	V_{CC}=4.5V to 5.5V		2.0	-	-	V
LOW-level input voltage	V_{IL}	V_{CC}=4.5V to 5.5V		-	-	0.8	V
HIGH-level output voltage	V_{OH}	V_I=V_{IH} or V_{IL}; V_{CC}=4.5V	I_O=-20uA	4.4	-	-	V
			I_O=-6.0mA	3.7	-	-	V
LOW-level output voltage	V_{OL}	V_I=V_{IH} or V_{IL}; V_{CC}=4.5V	I_O=20uA	-	-	0.1	V
			I_O=6.0mA	-	-	0.4	V
input leakage current	I_I	V_I=V_{CC} or GND; V_{CC}=5.5V		-	-	±1.0	uA
OFF-state output current	I_{OZ}	V_I=V_{IH} or V_{IL}; V_{CC}=5.5V; V_O=V_{CC} or GND		-	-	±10	uA
supply current	I_{CC}	V_I=V_{CC} or GND; I_O=0A; V_{CC}=5.5V		-	-	160	uA
additional supply current	ΔI_{CC}	per input pin; V_I=V_{CC}-2.1V; other inputs at V_{CC}	An or Bn inputs	-	-	196	uA
			$\overline{OE}$ input	-	-	735	uA

		or GND; V_{CC}=4.5V to 5.5V; I_O=0A	DIR input	-	-	441	uA

3.3.4、AC Characteristics 1

(T_{amb}=25℃, voltages are referenced to GND (ground=0V), unless otherwise specified.)

Parameter	Symbol	Conditions		Min.	Typ.	Max.	Unit
AiP74HC245							
An to Bn or Bn to An propagation delay	t_{PLH}, t_{PHL}	see Figure 4	V_{CC}=2.0V	-	25	90	ns
			V_{CC}=4.5V	-	9	18	ns
			V_{CC}=5.0V; C_L=15pF	-	7	-	ns
			V_{CC}=6.0V	-	7	15	ns
$\overline{OE}$ to An or Bn enable time	t_{PZL}, t_{PZH}	see Figure 5	V_{CC}=2.0V	-	30	150	ns
			V_{CC}=4.5V	-	11	30	ns
			V_{CC}=6.0V	-	9	26	ns
$\overline{OE}$ to An or Bn disable time	t_{PLZ}, t_{PHZ}	see Figure 5	V_{CC}=2.0V	-	41	150	ns
			V_{CC}=4.5V	-	15	30	ns
			V_{CC}=6.0V	-	12	26	ns
transition time	t_{THL}, t_{TLH}	see Figure 4	V_{CC}=2.0V	-	14	60	ns
			V_{CC}=4.5V	-	5	12	ns
			V_{CC}=6.0V	-	4	10	ns
AiP74HCT245							
An to Bn or Bn to An propagation delay	t_{PLH}, t_{PHL}	see Figure 4	V_{CC}=4.5V	-	12	22	ns
			V_{CC}=5.0V; C_L=15pF	-	10	-	ns
$\overline{OE}$ to An or Bn enable time	t_{PZL}, t_{PZH}	V_{CC}=4.5V; see Figure 5		-	16	30	ns
$\overline{OE}$ to An or Bn disable time	t_{PLZ}, t_{PHZ}	V_{CC}=4.5V; see Figure 5		-	16	30	ns
transition time	t_{THL}, t_{TLH}	V_{CC}=4.5V; see Figure 4		-	5	12	ns

i-core

3.3.5、AC Characteristics 2

(T_{amb}=-40℃ to +85℃, voltages are referenced to GND (ground=0V), unless otherwise specified.)

Parameter	Symbol	Conditions		Min.	Typ.	Max.	Unit
AiP74HC245							
An to Bn or Bn to An propagation delay	t_{PLH}, t_{PHL}	see Figure 4	V_{CC}=2.0V	-	-	115	ns
			V_{CC}=4.5V	-	-	23	ns
			V_{CC}=6.0V	-	-	20	ns
$\overline{OE}$ to An or Bn enable time	t_{PZL}, t_{PZH}	see Figure 5	V_{CC}=2.0V	-	-	190	ns
			V_{CC}=4.5V	-	-	38	ns
			V_{CC}=6.0V	-	-	33	ns
$\overline{OE}$ to An or Bn disable time	t_{PLZ}, t_{PHZ}	see Figure 5	V_{CC}=2.0V	-	-	190	ns
			V_{CC}=4.5V	-	-	38	ns
			V_{CC}=6.0V	-	-	33	ns
transition time	t_{THL}, t_{TLH}	see Figure 4	V_{CC}=2.0V	-	-	75	ns
			V_{CC}=4.5V	-	-	15	ns
			V_{CC}=6.0V	-	-	13	ns
AiP74HCT245							
An to Bn or Bn to An propagation delay	t_{PLH}, t_{PHL}	see Figure 4	V_{CC}=4.5V	-	-	28	ns
$\overline{OE}$ to An or Bn enable time	t_{PZL}, t_{PZH}	V_{CC}=4.5V; see Figure 5		-	-	38	ns
$\overline{OE}$ to An or Bn disable time	t_{PLZ}, t_{PHZ}	V_{CC}=4.5V; see Figure 5		-	-	38	ns
transition time	t_{THL}, t_{TLH}	V_{CC}=4.5V; see Figure 4		-	-	15	ns

3.3.6、AC Characteristics 3

(T_{amb}=-40℃ to +125℃, voltages are referenced to GND (ground=0V), unless otherwise specified.)

Parameter	Symbol	Conditions		Min.	Typ.	Max.	Unit
AiP74HC245							
An to Bn or Bn to An propagation delay	t_{PLH}, t_{PHL}	see Figure 4	V_{CC}=2.0V	-	-	135	ns
			V_{CC}=4.5V	-	-	27	ns
			V_{CC}=6.0V	-	-	23	ns
$\overline{OE}$ to An or Bn enable time	t_{PZL}, t_{PZH}	see Figure 5	V_{CC}=2.0V	-	-	225	ns
			V_{CC}=4.5V	-	-	45	ns
			V_{CC}=6.0V	-	-	38	ns
$\overline{OE}$ to An or Bn disable time	t_{PLZ}, t_{PHZ}	see Figure 5	V_{CC}=2.0V	-	-	225	ns
			V_{CC}=4.5V	-	-	45	ns
			V_{CC}=6.0V	-	-	38	ns
transition time	t_{THL}, t_{TLH}	see Figure 4	V_{CC}=2.0V	-	-	90	ns
			V_{CC}=4.5V	-	-	18	ns
			V_{CC}=6.0V	-	-	15	ns
AiP74HCT245							
An to Bn or Bn to An propagation delay	t_{PLH}, t_{PHL}	see Figure 4	V_{CC}=4.5V	-	-	33	ns
$\overline{OE}$ to An or Bn enable time	t_{PZL}, t_{PZH}	V_{CC}=4.5V; see Figure 5		-	-	45	ns
$\overline{OE}$ to An or Bn disable time	t_{PLZ}, t_{PHZ}	V_{CC}=4.5V; see Figure 5		-	-	45	ns
transition time	t_{THL}, t_{TLH}	V_{CC}=4.5V; see Figure 4		-	-	18	ns

i-CORE

4、Testing Circuit

4.1、AC Testing Circuit

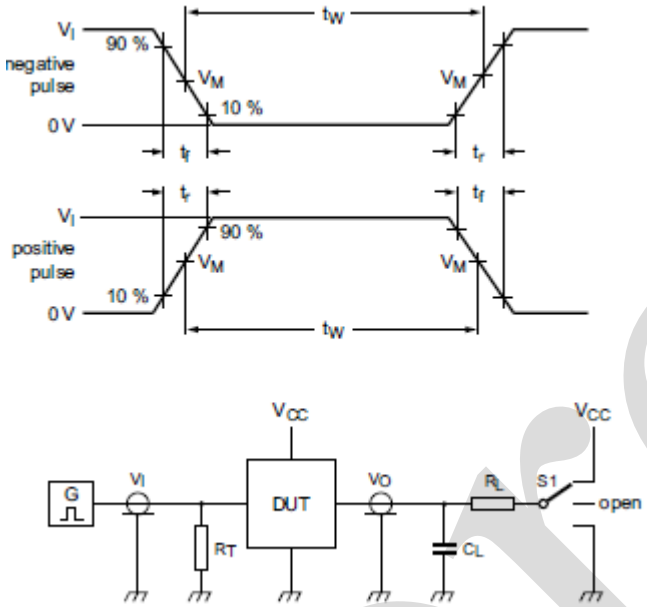

Figure 3. Test circuit for measuring switching times

Definitions for test circuit:

R_L=Load resistance.

C_L=Load capacitance including jig and probe capacitance.

R_T=Termination resistance should be equal to the output impedance Z_o of the pulse generator.

S1=Test selection switch.

4.2、AC Testing Waveforms

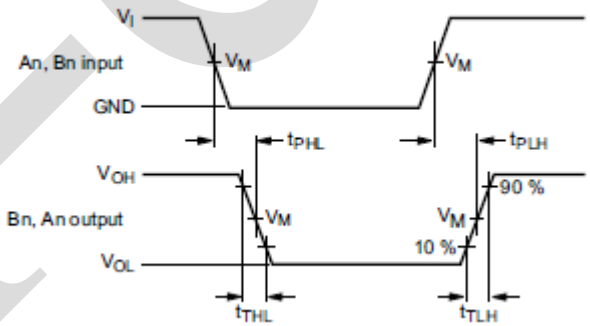

Figure 4. Input (An, Bn) to output (Bn, An) propagation delays and output transition times

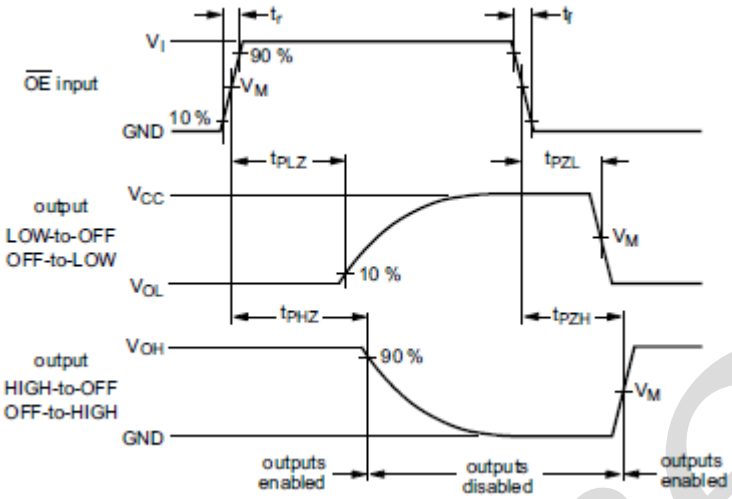

Figure 5. 3-state enable and disable times

4.3、Measurement Points

Type	Input	Output
	V_M	V_M
AiP74HC245	$0.5\times V_{CC}$	$0.5\times V_{CC}$
AiP74HCT245	1.3V	1.3V

4.4、Test Data

Type	Input		Load		S1 position		
	V_I	t_r , t_f	C_L	R_L	t_{PHL}, t_{PLH}	t_{PZH}, t_{PHZ}	t_{PZL}, t_{PLZ}
AiP74HC245	V_{CC}	6ns	15pF, 50pF	1kΩ	open	GND	V_{CC}
AiP74HCT245	3V	6ns	15pF, 50pF	1kΩ	open	GND	V_{CC}

5、Package Information

5.1、DIP20

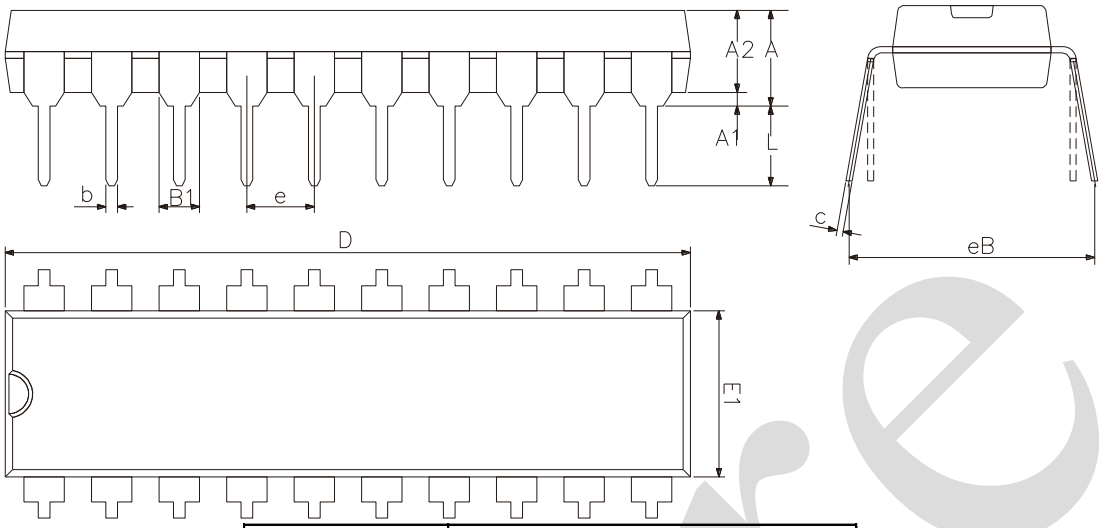

2023/12/A	Dimensions In Millimeters	
Symbol	**Min**	**Max**
A	3.60	5.33
A1	0.51	—
A2	3.20	3.60
b	0.36	0.53
B1	1.52	
c	0.204	0.36
D	25.70	26.54
E1	6.20	6.75
e	2.54	
eB	7.62	9.30
L	3.00	3.60

i-core

5.2、SOP20

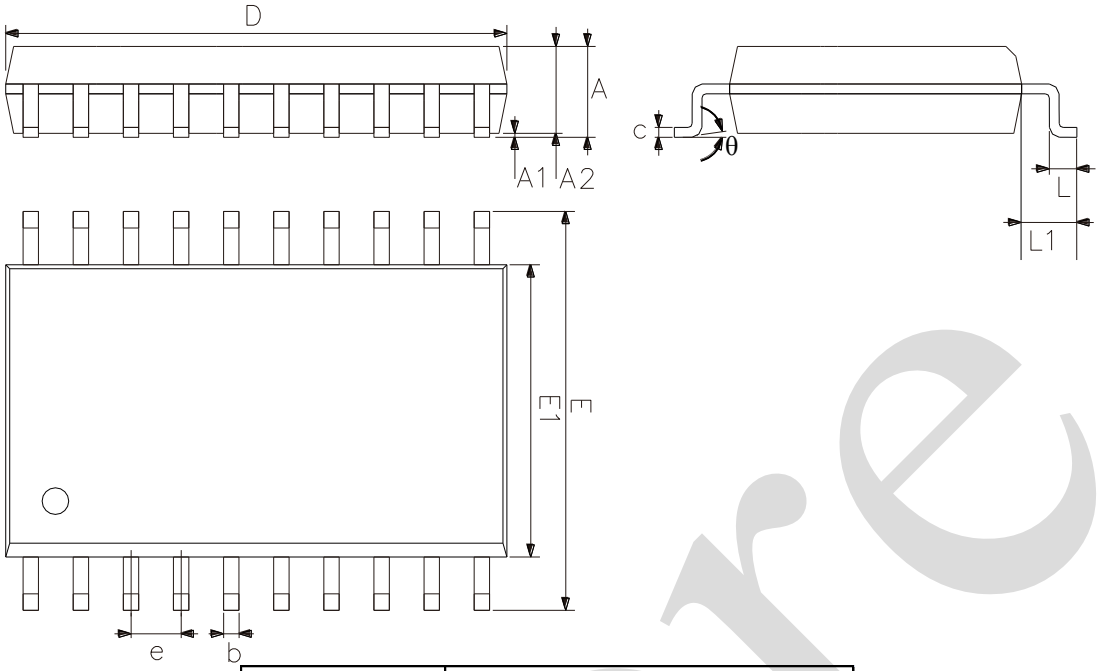

2023/12/A	Dimensions In Millimeters	
Symbol	**Min.**	**Max.**
A	2.47	2.65
A1	0.05	0.30
A2	2.20	2.44
b	0.35	0.50
c	0.15	0.30
D	12.54	12.94
E	10.00	10.60
E1	7.30	7.70
e	1.27	
L	0.40	1.05
L1	1.30	1.50
θ	0°	8°

i-core

5.3、TSSOP20

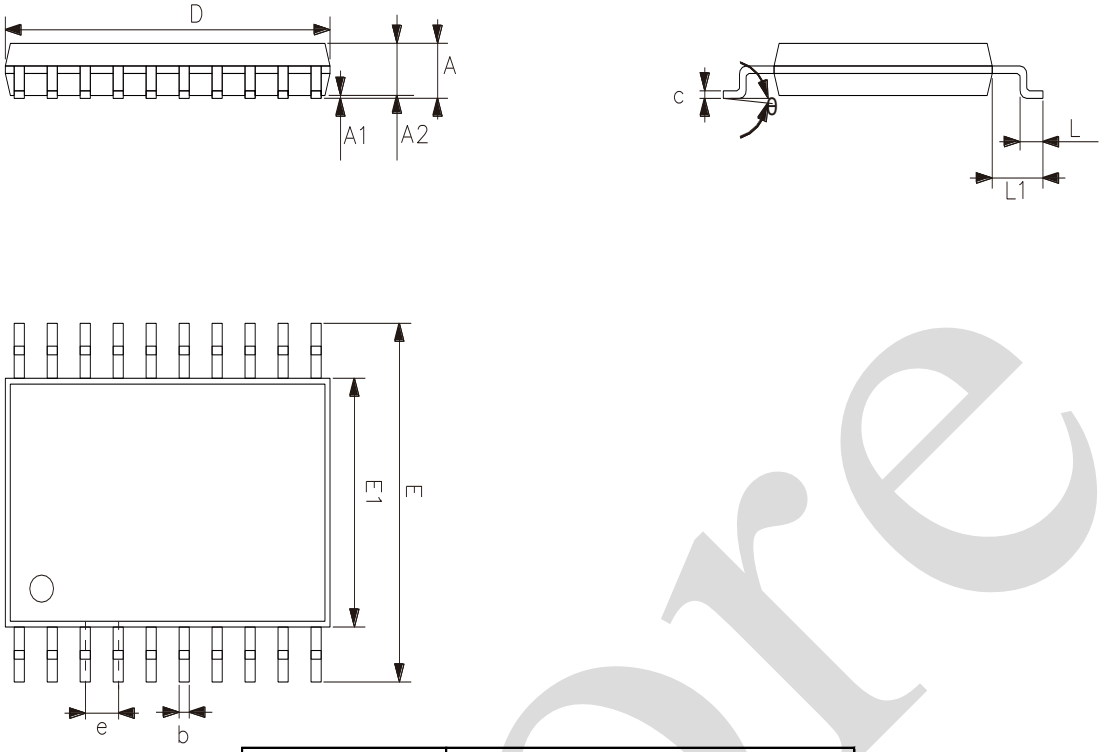

2023/12/A	Dimensions In Millimeters	
Symbol	**Min**	**Max**
A	—	1.20
A1	0.05	0.15
A2	0.80	1.05
b	0.19	0.30
c	0.09	0.20
D	6.40	6.60
E1	4.30	4.50
E	6.20	6.60
e	0.65	
L	0.45	0.75
L1	1.00	
θ	0°	8°

i-core

5.4、DHVQFN20

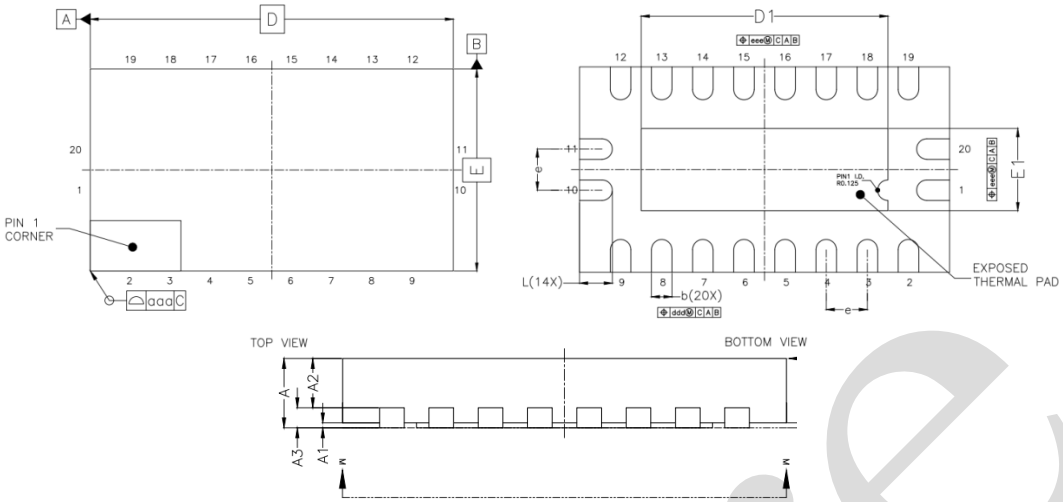

2023/12/A	Dimensions In Millimeters	
Symbol	**Min**	**Max**
A	0.80	1.00
A1	0.00	0.05
A2	0.60	0.70
A3	0.20	
D	4.40	4.60
E	2.40	2.60
e	0.50	
b	0.18	0.30
L	0.30	0.50
D1	2.70	3.15
E1	0.70	1.15

5.5、QFN20

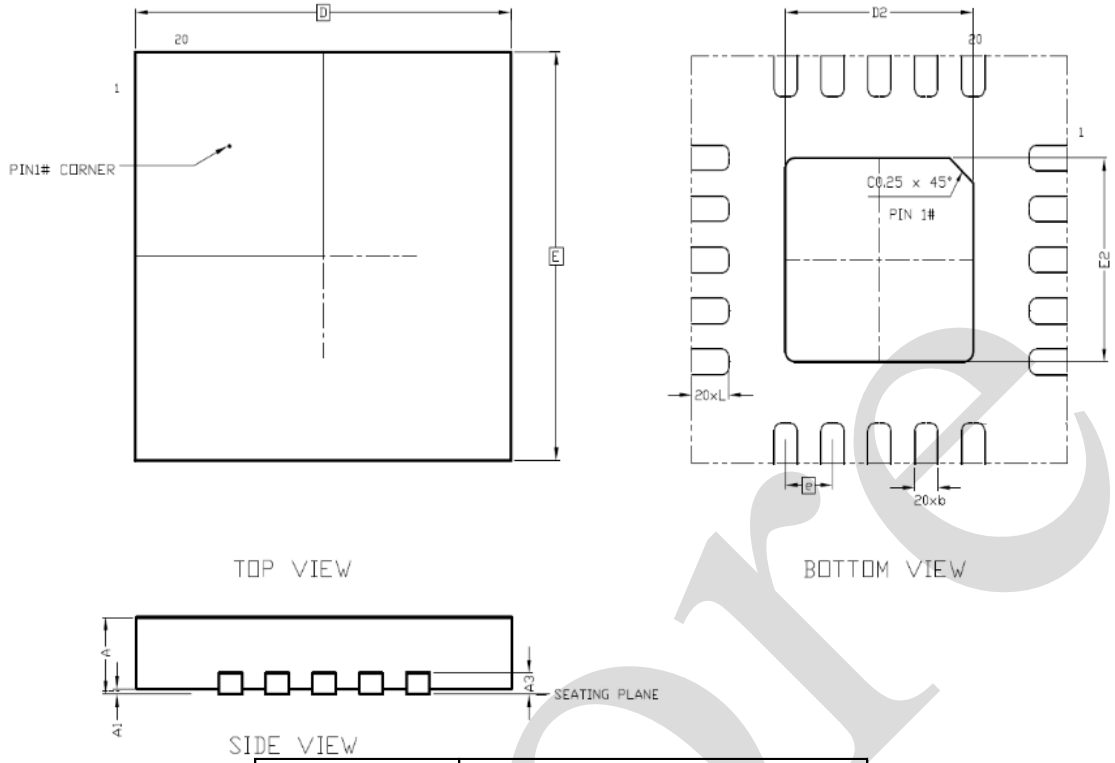

2023/12/A	Dimensions In Millimeters	
Symbol	**Min**	**Max**
A	0.70	0.80
A1	0	0.05
A3	0.20	
b	0.18	0.30
D	4.00	
E	4.00	
D2	1.90	2.10
E2	1.90	2.10
e	0.50	
L	0.35	0.45

6、Statements And Notes

6.1、The name and content of Hazardous substances or Elements in the product

Part name	Hazardous substances or Elements									
	Lead and lead compounds	Mercury and mercury compounds	Cadmium and cadmium compounds	Hexavalent chromium compounds	Polybrominated biphenyls	Polybrominated biphenyl ethers	Dibutyl phthalate	Butylbenzyl phthalate	Di-2-ethylhexyl phthalate	Diisobutyl phthalate
Lead frame	○	○	○	○	○	○	○	○	○	○
Plastic resin	○	○	○	○	○	○	○	○	○	○
Chip	○	○	○	○	○	○	○	○	○	○
The lead	○	○	○	○	○	○	○	○	○	○
Plastic sheet installed	○	○	○	○	○	○	○	○	○	○
explanation	○: Indicates that the content of hazardous substances or elements in the detection limit of the following the SJ/T11363-2006 standard. ×: Indicates that the content of hazardous substances or elements exceeding the SJ/T11363-2006 Standard limit requirements.									

6.2、Notes

We recommend you to read this chapter carefully before using this product.

The information in this chapter is provided for reference only and i-Core disclaims any express or implied warranties, including but not limited to applicability, special application or non-infringement of third party rights.

This product is not suitable for critical equipment such as life-saving, life-sustaining or safety equipment. It is also not suitable for applications that may result in personal injury, death, or serious property or environmental damage due to product malfunction or failure. I-Core will not be liable for any damages incurred by the customers at their own risk for such applications.

The customer is responsible for conducting all necessary tests i-Core's application to avoid failure in the application or the application of the customer' s third party users. I-Core does not accept any liability.

The Company reserves the right to change or improve the information published in this chapter at any time. The information in this chapter are subject to change without notice. We recommend the customer to consult our sales staff before purchasing.

Please obtain related materials form i-Core's regular channels and we are not responsible for its content if it is provided by sources other than our company.

In case of any conflict between the Chinese and English version, the version is subject to the Chinese one.